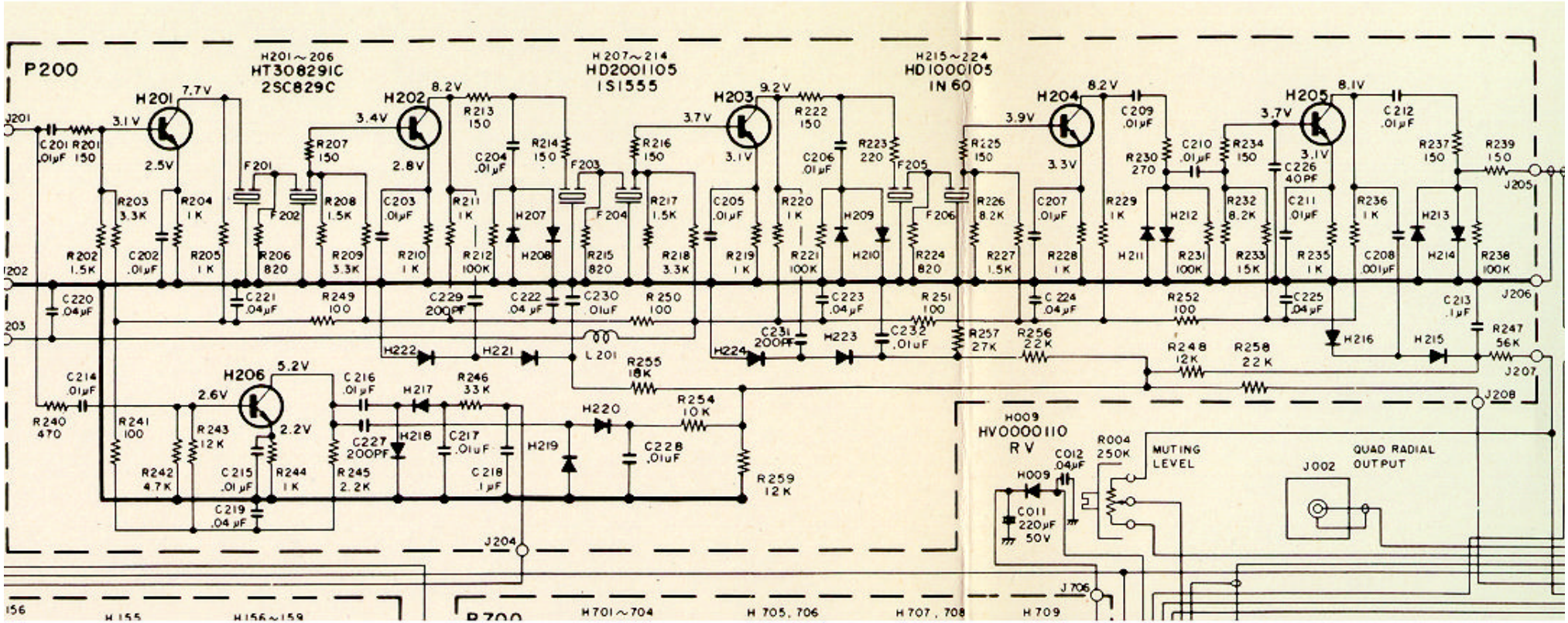
P200
H201~206
HT30829IC
2SC829C
H207~214
HD2001105
1S1555
H215~224
HD1000105
IN 60
H009
HV0000110
RV
MUTING
LEVEL
QUAD RADIAL
OUTPUT
J002
H701~704
H705, 706
H707, 708
H709

P200